GISON Pneumatic Tools

GP-920 6" Heavy Duty Air Straight Grinder

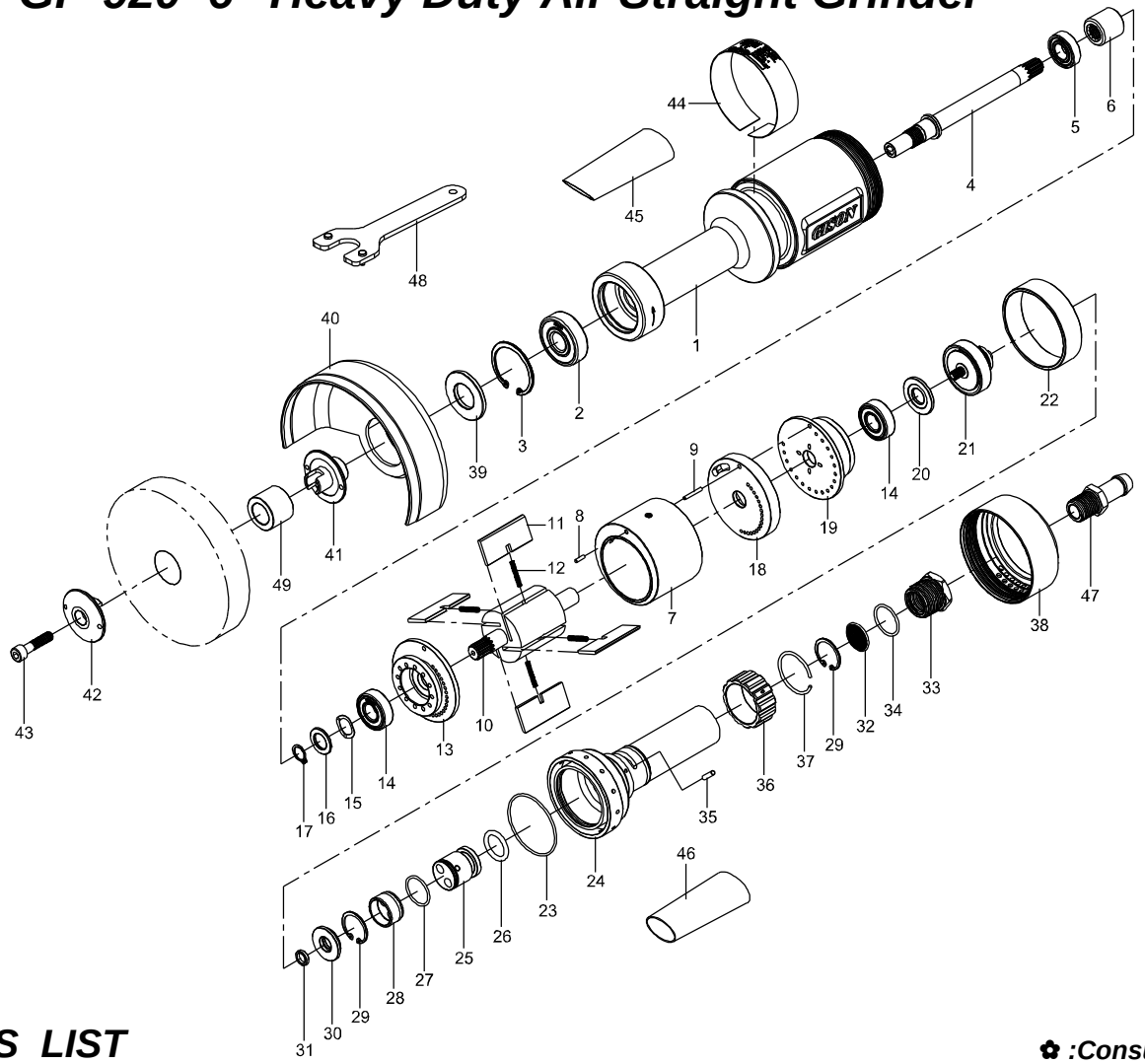

PARTS LIST

✿ :Consuming Part

Item No.	Part No.	Description	Qty	Item No.	Part No.	Description	Qty
1	920A10000	Housing	1	26	OR056	O-Ring	1
2	B6303ZZ	Ball Bearing	1	27	OR058	O-Ring	1
3	R47	Retainer	1	28	920A20200	Valve Bushing	1
4	920A30000	Main Shaft	1	29	R28	Retainer	2
5	B6002ZZ	Ball Bearing	1	30	920A20201	Governor Cover	1
6	920A30100	Bushing	1	31	SG015	Oil Seal	1
7	920A10200	Cylinder	1	32	920A20301	Muffler	1
8	P027	Pin	1	33	920A20300	Air Inlet Screw	1
9	P011	Pin	1	34	OR055	O-Ring	1
10	920A10300	Rotor	1	35	P028	Pin	1
11	918015	Rotor Blade	4	36	920A20100	Switch Ring	1
12	S065	Spring	4	37	920A20400	Retainer	1
13	920A10100	Front Plate	1	38	920A40000	Set Ring	1
14	B6202ZZ	Ball Bearing	2	39	920A30400	Dust Cap	1
15	WW15	Spring Washer	1	40	920A50000	Disc Guard	1
16	920A10302	Washer	1	41	920A30200	Disc Receiver	1
17	C14	Retaining Ring	1	42	920A30300	Disc Washer	1
18	920A10400	Rear Plate	1	43	CAP008	Cap Screw	1
19	920A10500	Air Inlet Cap	1	44	920A10800	Serial No.	1
20	920A10501	Dust Cover	1	45	829003W	Plastic Sleeve	1
21	918h02	Governor Assembly	1	46	920A20500	Plastic Sleeve	1
22	920A40100	Cylinder Sleeve	1	47	920A60000	Air Inlet Plug	1
23	OR049	O-Ring	1	48	920T10000	Spanner	1
24	920A20000	Handle	1	49	920A30500	Bushing For Disc Wheel	1
25	920A20101	Valve Ring	1				

2009/11/12