GISON Pneumatic Tools

GP-401 Air Under Coating Gun

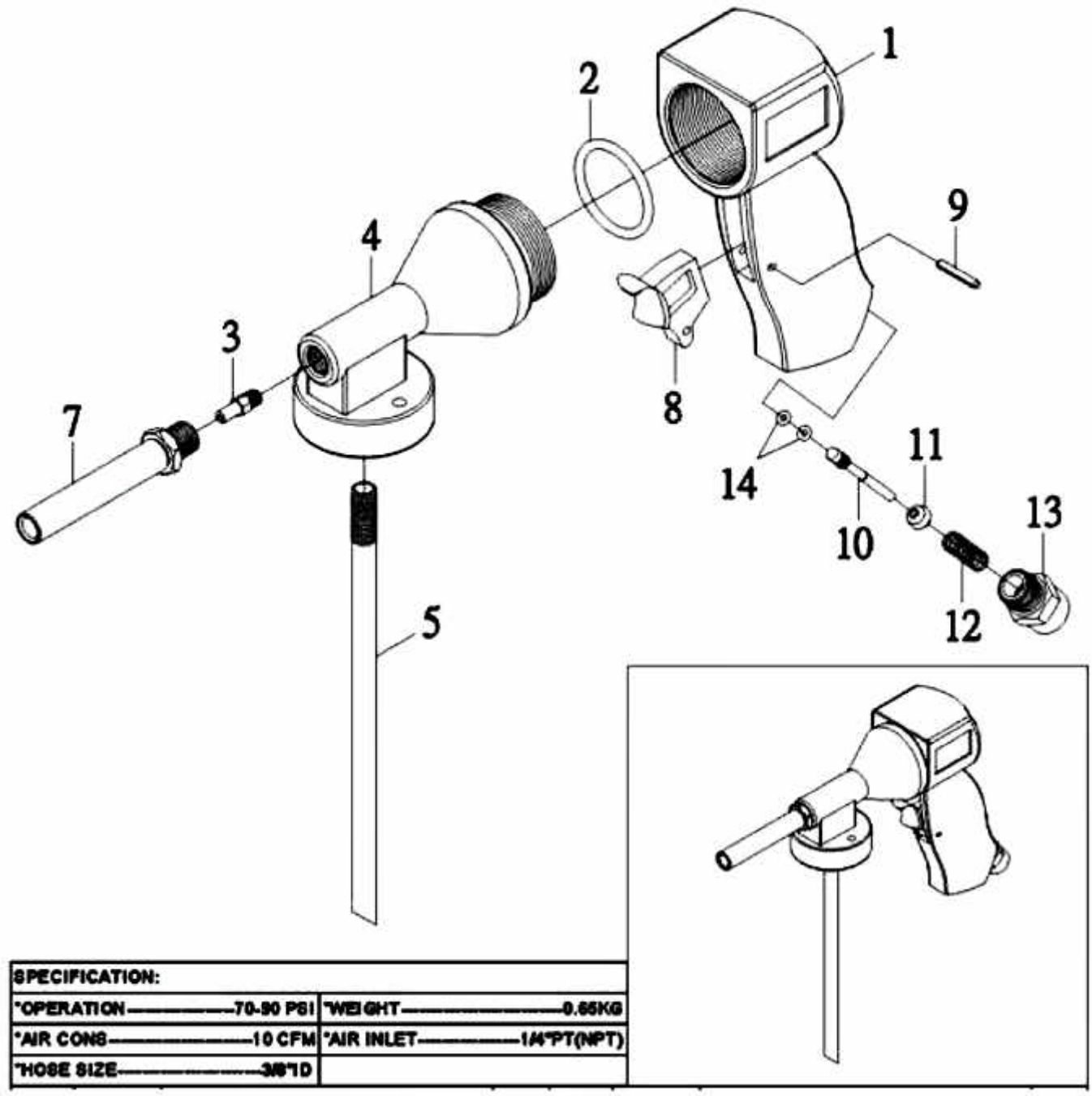

PARTS LIST

✿ :Consuming Part

No.	Part No.	Description	Qty.	No.	Part No.	Description	Qty.
1	401001	Handle	1	7	401007	Nose Piece	1
2	401002	O-Ring P32	1	8	401008	Trigger	1
3	401003	Hex Screw	1	9	401009	Pin	1
4	401004	Head (Cup 43.7mm/43.2mm/40.3mm/43.8mm)	1	10	401010	Valve Stem	1
5	401005-1	Tube (Length 193mm)	1	11	401011	Valve Ball	1
	401005-2	Tube (Length 206mm)	1	12	401012	Throttle Spring	1
	401005-3	Tube (Length 220mm)	1	13	401013	Air Inlet Bushing	1
	401005-4	Tube (Length 252mm)	1	14	401014	O-Ring (d2.5xW1.5)	2

2011/6/29